Assessment of e-fuels and biomass-based fuels in the Nordic energy system (work in progress)

Omar Elyamany[1], Dmitrii Bogdanov[1], Yunlong Zhang[2], Markus Millinger[2], Christian Breyer[1]

[1] LUT University, Lappeenranta, Finland; [2] Chalmers University, Sweden

3.1% annual system cost difference across FT technology scenarios

97.2% eBtL production share in reference scenario

393 TWh/a eBtL FTL production potential of Nordics

0.2-0.3% energy system cost difference between LUT-ESTM and PyPSA

33.4-36.5b€ energy system cost depending on model and setup used

Background & motivation

Energy transition challenge: sustainable kerosene and diesel are required for defossilisation of aviation and maritime transport.

Sustainable options limitations: biomass-to-liquids (BtL) is resource-limited; electricity-based FT liquids (e-FTL) require renewable H_2 and high cost sustainable CO_2.

Opportunity: biomass-to-liquids (BtL) can be fed additional volumes of green hydrogen, increasing carbon efficiency of BtL process.

Questions: What is the role of competing processes? How do fuel routes affect total Nordic energy system? How model choice affects the results?



Fig. 1 Four Nordic regions excluding island nations.

Methods: LUT-ESTM & PyPSA

Models: LUT Energy System Transition Model and PyPSA (standard PyPSA-Eur version)

Setup: overnight simulations for 2040 carbon neutral energy system. Existing RE capacities are forced into the system, nuclear – part of free cost optimisation.

Scope: ~160 technologies across power, heat, transport, industry and fuel synthesis.

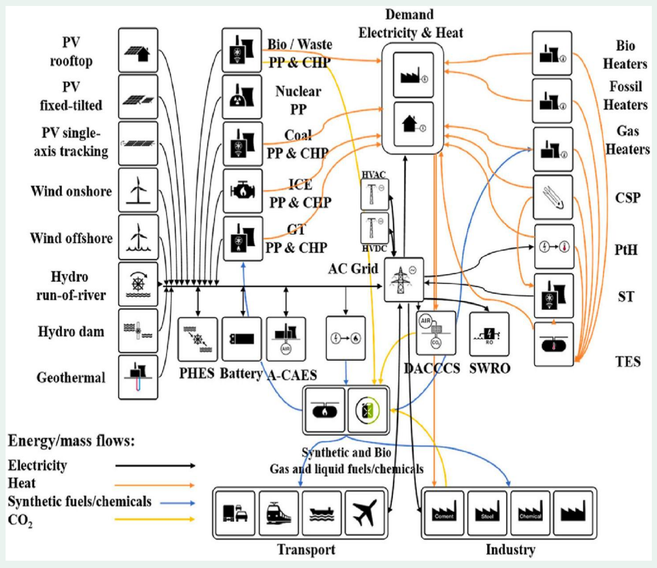

Fig. 2 Schematic of the LUT Energy System Transition Model.

Scenario variations: Reference scenario assumes all technologies available

1. FTL supply technologies access variations
2. Demand volume scenarios
3. PyPSA-Eur with forced RE capcities from LUT-ESTM
4. LUT-ESTM with forced RE capcities from PyPSA-Eur
5. LUT-ESTM modified to resemble current version of PyPSA-Eur

Inputs harmonisation:
All cost and technical assumptions are adopted from LUT-ESTM and introduced to PyPSA .nc file at solver's model compilation stage.

2040 Nordic model assumptions

Resource	Nordic total	Unit
Final energy demand	1003	TWh/a
Available biomass	296	TWhth/a
Solar PV potential	5199	GW
Onshore wind potential	388	GW
Offshore wind potential	160	GW
Hydropower potential	63	GW

Tech	Capex (€/kW_{LHV})	$Opex_{fix}$ (€/kW_{LHV})	$Opex_{var}$ (€/MWh)	H_2 eff	Biomass eff
e-FTL	83.41	41.40	3.2	0.659	-
BtL	174.87	86.80	3.0	-	0.470
BtL-CC	415.27	149.24	1.42	-	0.417
e-BtL	129.45	64.85	2.13	0.869	1.325

Results: energy system impact

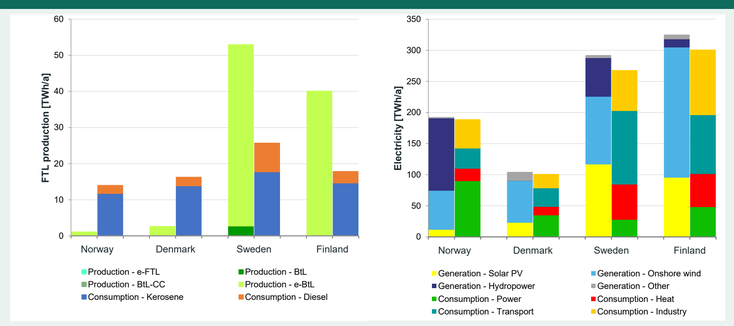

Fig. 3 FTL production (left) and electricity supply (right) in reference scenario.

Energy balance: biomass rich Sweden and Finland become core energy suppliers in Nordics.

eBtL becomes core technology supplying most of sustainable FTL fuels

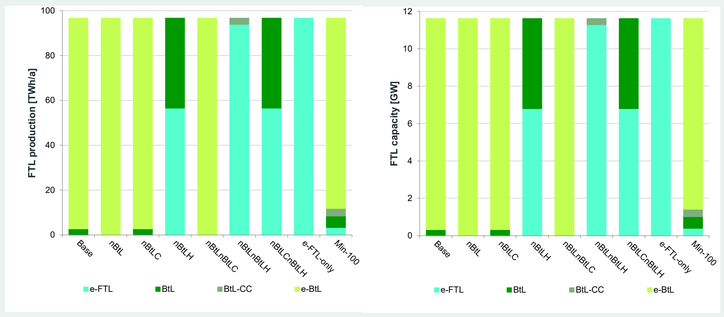

Fig. 4 FTL production structure across scenarios.

FTL supply technologies: e BtL, BtL and eFT are core suppliers across all scenarios

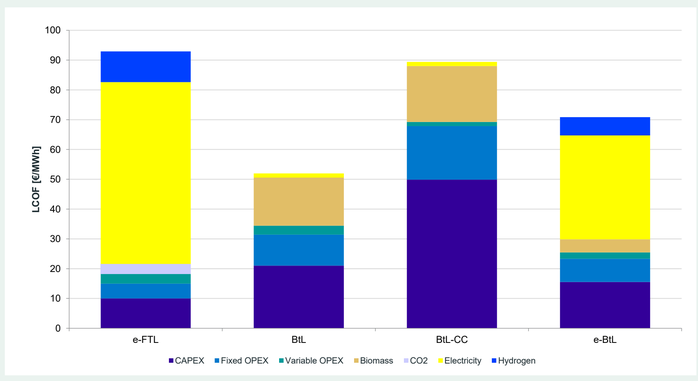

Fig. 5 Levelised cost of fuel and cost breakdown for FTL technologies

BtL is the least cost technology, but the value of biomass savings with eBtL is higher.

Demand increase: biomass potential of Nordics is sufficient to triple eBtL production and become e-fuels exporter.

Models impact

LUT-ESTM and PyPSA-Eur provide substantially different solutions in terms of power, heat and FTL supply systems.

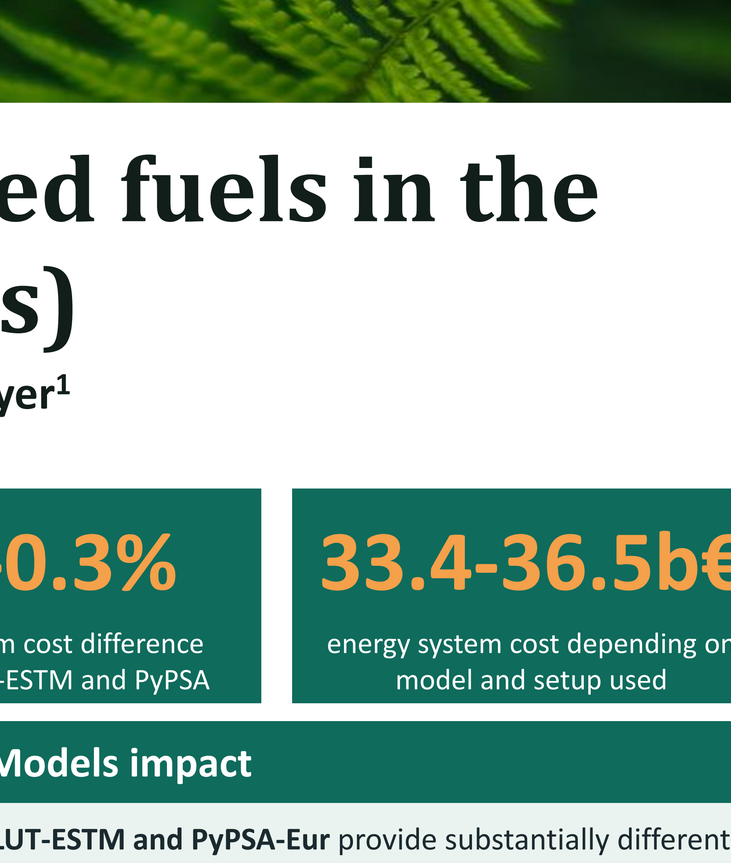

Fig. 6 FTL (top), power (middle), heat (bottom) capacities (left) outputs (right) across model's comparison scenarios

LUT-ESTM optimizes system for abundant electricity supply in winter (wind). **PyPSA-Eur** prioritises low cost electricity supply sources (PV) and high efficiency het supply (HP).

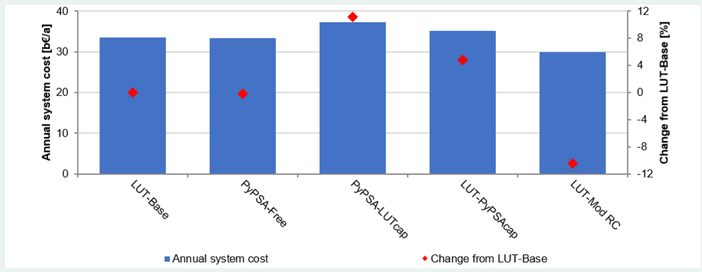

Fig. 7 System cost across model's comparison scenarios

Despite substantial difference in energy system structure both models come up to very close energy system cost.

Limitations

Structural differences such as different heat supply structure and FT crude mix still impact the results.

Latest updates of PyPSA developed as part of RESILIENT project are not considered.

Heat storage seem to be another source of differences to be explored.

More information Q&A:

Zoom:

Teams:

*Contact: dmitrii.bogdanov@lut.fi.. Funded by Business Finland (RESILIENT).

LUT Group Confidential - Other information (3Y)